ALU_HW4 & HW5
說明、注意事項

Due Day:
HW4: 2025/12/14 23:59
HW5: 2025/12/28 23:59

Department of Computer Science and Engineering
National Sun Yat-sen University

TA's E-mail: m133040045@g-mail.nsysu.edu.tw 丁祥益
LAB: VLSI 5015

2025.11.24

- 詳讀以下所有檔案後，再依照Submission Guidelines完成作業

1. Description_ALU_HW4_...
2. Supplement_ALU_HW4_...
3. Submission_Guidelines_ALU_HW4_...
4. Description_ALU_HW5_...
5. Supplement_ALU_HW5_...
6. Submission_Guidelines_ALU_HW5_...
7.

Outline

- HW4 --- sign bits reduction
  1. 作業要求
  2. 繳交檔案
  3. 評分標準
- HW5 --- truncated multiplier
  1. 作業要求
  2. 繳交檔案
  3. 評分標準
- Appendix

HW4
Sign Bits Reduction

1. 作業要求

- $8 \times 8, 16 \times 8, 16 \times 16$ (There are a total of 18 different kinds of MULs)
  1. op : signed operator(use operator *)
  2. sign extension : original sign extension
  3. reduction : sign bits reduction
  4. BW : sign bits reduction by Baugh-Wooley method
  5. booth : original sign extension with radix-4 Booth recoding
  6. booth reduction : sign bits reduction with radix-4 Booth recoding

- All multipliers can be verified by one testbench
  1. Run 100 test data sets
  2. Compare the relative error and absolute error between the software result and the hardware output.

- Synthesis with delay and area optimization

Note:
測試資料和Answer(標準答案)請自行產生。
報告中說明測試資料和標準答案如何產生。可能會與硬體輸出有誤差，試圖解釋存在誤差的原因。

2. 繳交檔案 (1/2)

- Code and generated files → Submit to the server

cp -r /MasterClass/MXXXXXXXXX_ALU/HWX/ /MasterClass/Homework-Submit/MXXXXXXXX_ALU/

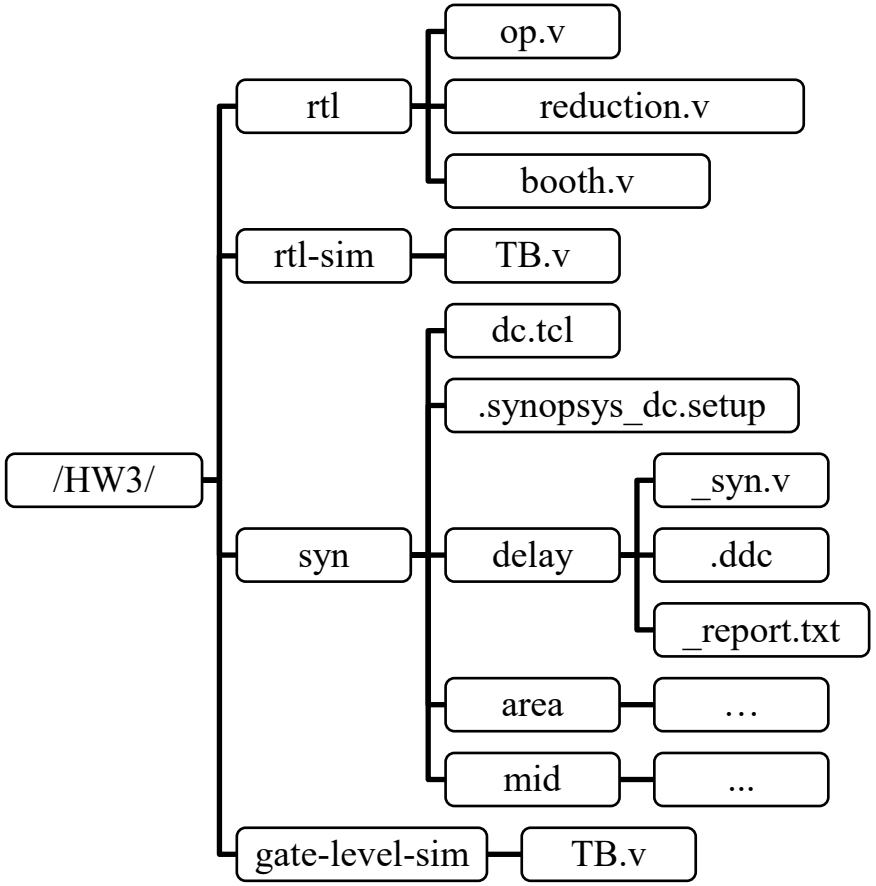

Note:

1. a total of 6 RTL files (.v)
2. delay, area, in-between optimization

2. 繳交檔案 (2/2)

- Report→ Submit to E-Learning platform (new)
  1. Data Table (Appendix 1)
  2. 模擬後，證明函數正確的截圖(e.g. 波形圖)
  3. 說明你驗證硬體答案的方式，是否有誤差? 誤差怎麼來的?
  4. 心得，試圖比較以上的sign bit reduction方法的優劣，以及說明你認為的原因。
  5. 其他上課時，老師有提及的內容

Note: 繳交 student ID_ALU_hw4.pdf

3. 評分標準

- (60%) RTL code of 18 types of multipliers
- (20%) Testbench, Simulation results, Synthesis results(.ddc、.v、.sdf、.sdc)
- (20%) Final report which contains the aforementioned information

HW5
Truncated Multiplier

1. 作業要求

- 8 × 8,16 × 16 (There are a total of 10 different kinds of MULs)
  1. op : signed operator(use operator *)
  2. row accumulation(no correction)
  3. truncated multiplier (constant correction)
  4. truncated multiplier (variable correction)
  5. truncated array multiplier (variable correction)

- All multipliers can be verified by one testbench
  1. Run 100 test data sets
  2. Compare the relative error and absolute error between the software result and the hardware output.

- Synthesis with delay and area optimization

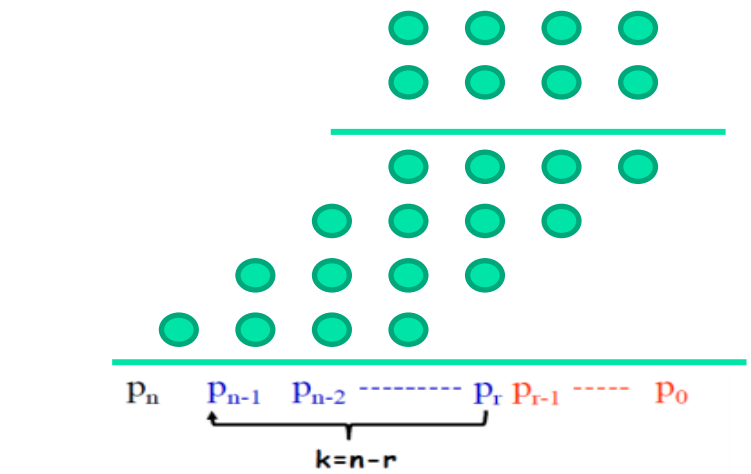

- $r = n-k$ least significant columns are eliminated, a correction constant is added, and the product is truncated to n bits
- $k=n-r$ is the number of reserved columns for PP compression

Slide 118

2. 繳交檔案 (1/2)

- Code and generated files → Submit to the server

cp -r /MasterClass/MXXXXXXXXX_ALU/HWX/ /MasterClass/Homework-Submit/MXXXXXXXX_ALU/

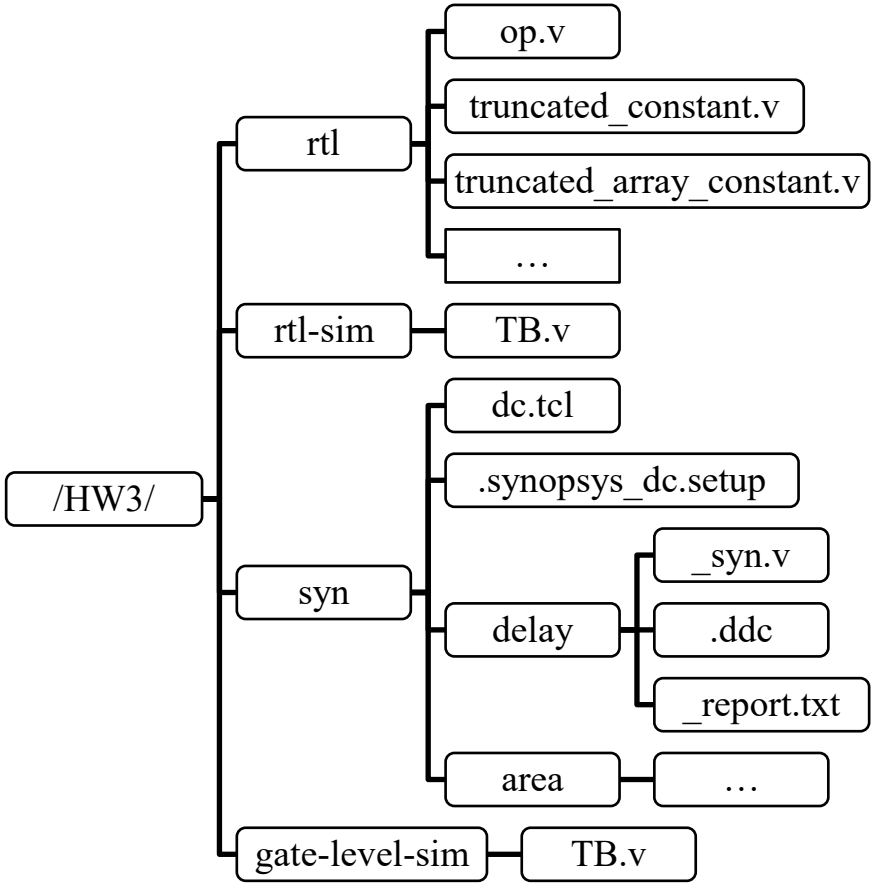

Note:

1. a total of 5 RTL files (.v)
2. delay, area, and in-between optimization

2. 繳交檔案 (2/2)

- Report→ Submit to E-Learning platform (new)
  1. Data Table (Appendix 2)
  2. 模擬後，證明函數正確的截圖(e.g. 波形圖)
  3. 說明你如何產生測資，以及如何驗證硬體答案，是否有誤差? 誤差怎麼來的?
  4. 其他上課時，老師有提及的內容

Note: 繳交 student ID_ALU_hw5.pdf

3. 評分標準

- (60%) RTL code of 10 types of multipliers
- (20%) Testbench, Simulation results, Synthesis results(.ddc、.v、.sdf、.sdc)
- (20%) Final report which contains the aforementioned information

Appendices
(僅供參考)

Appendix 1 --- HW4 Data Table

8x8		operator			row			row_opt			row_mbw			row_booth			row_booth_opt		
		delay	area	mid	delay	area	mid	delay	area	mid	delay	area	mid	delay	area	mid	delay	area	mid
delay																			
area																			
power (uW)	dynamic																		
	leakage																		
	total																		

8x16		operator			row			row_opt			row_mbw			row_booth			row_booth_opt		
		delay	area	mid	delay	area	mid	delay	area	mid	delay	area	mid	delay	area	mid	delay	area	mid
delay																			
area																			
power (uW)	dynamic																		
	leakage																		
	total																		

16x16		operator			row			row_opt			row_mbw			row_booth			row_booth_opt		
		delay	area	mid	delay	area	mid	delay	area	mid	delay	area	mid	delay	area	mid	delay	area	mid
delay																			
area																			
power (uW)	dynamic																		
	leakage																		
	total																		

Note: 上面表格module名稱請自行決定，讓助教可以看得懂的名稱。

Appendix 2 --- HW5 Data Table

8x8		operator			truncated_mul			truncated_mul_constant			truncated_mul_variable			truncated_array_variable		
		delay	area	mid	delay	area	mid	delay	area	mid	delay	area	mid	delay	area	mid
delay																
area																
power (uW)	dynamic															
	leakage															
	total															

16x16		operator			row_accumulation			truncated_mul_constant			truncated_mul_variable			truncated_array_variable		
		delay	area	mid	delay	area	mid	delay	area	mid	delay	area	mid	delay	area	mid
delay																
area																
power (uW)	dynamic															
	leakage															
	total															

Note: 上面表格module名稱請自行決定，讓助教可以看得懂的名稱。

NOTE:

1. 不要到最後一週才開始做。
2. 有疑問一律先寄e-mail詢問。
3. 提供的參考code僅供參考，不要詢問參考資料的程式。
4. TA Office Time: (三)、(四)、(五) 14:00~17:00